RAMTEQ™ Simply Done Right™

XVG SERIES

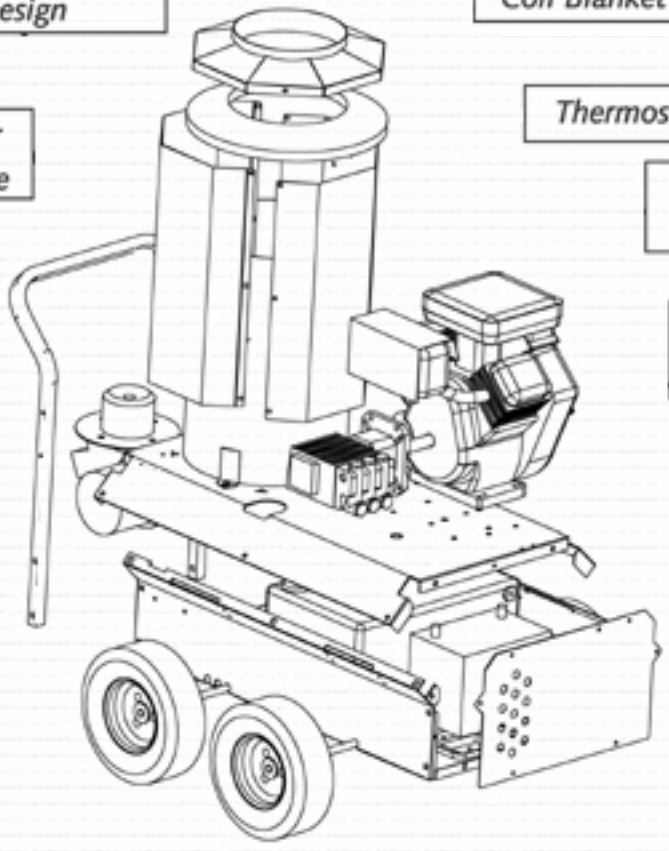

FLORIDA WATER BLAST, INC.
12995 Automobile Blvd.
Clearwater, FL 33762
1-800-966-0614
www.floridawaterblast.net